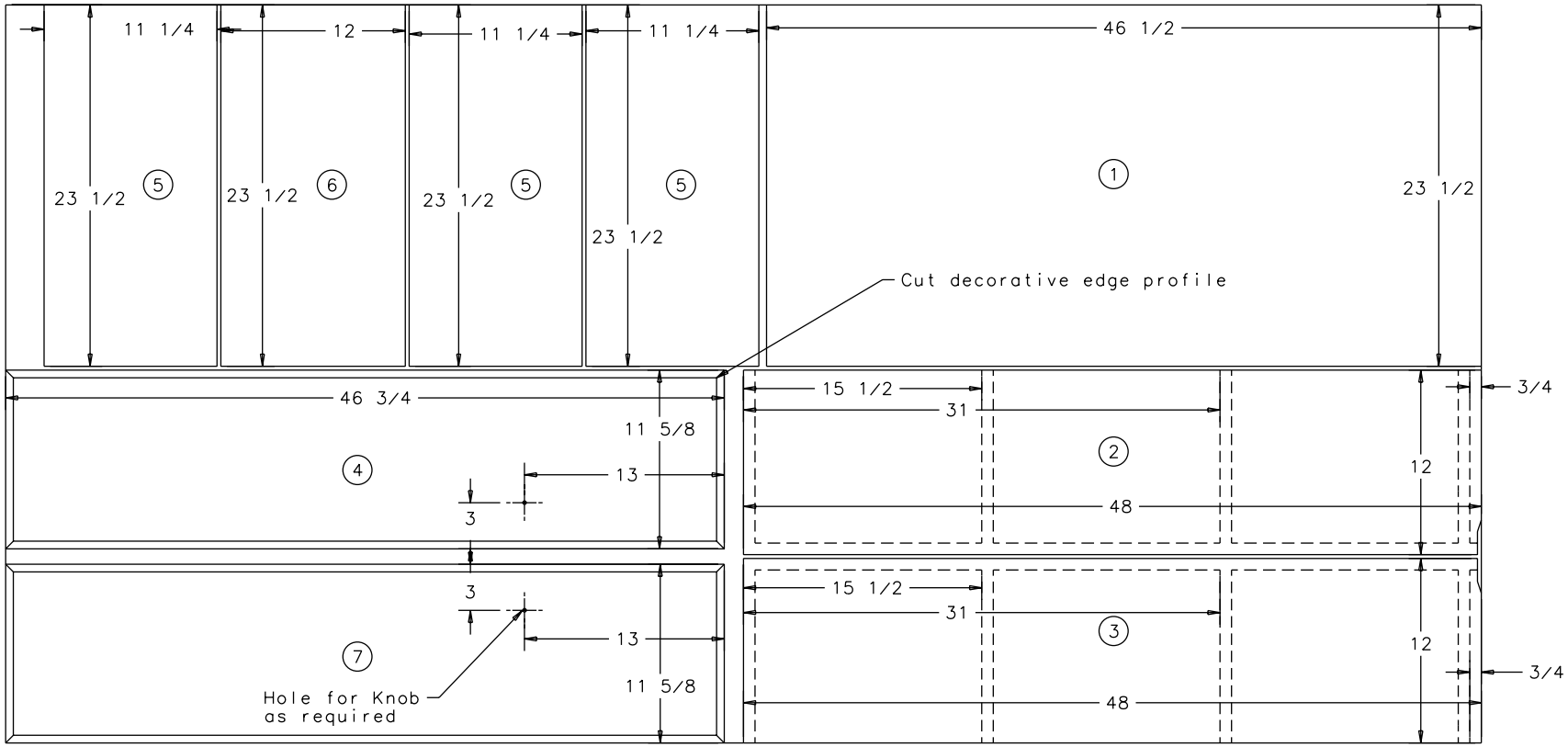

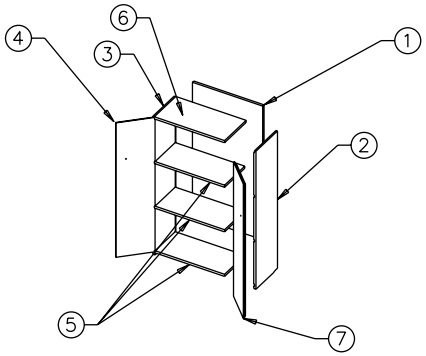

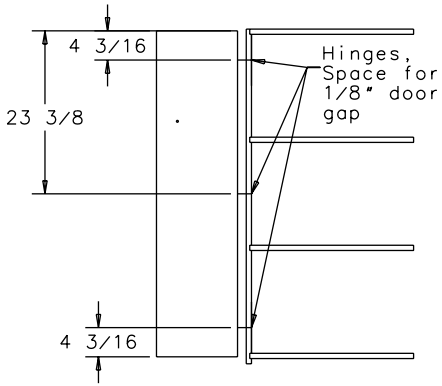

Cut from 1 sheet of 4x8 3/4" plywood.

Use cut order to ensure:
That 1, 5 and 6 are the same width,
That 2 and 3, and 4 and 7 are the same depth and height,
That all 5's are the same depth and height.

Also

50	#7 Brown Coat Deck screws Robertson Drive 1.75" long
6	cabinet hinges self-closing variety
30	#6 screws Robertson Drive 1" long
2	knobs

Predrill all holes. Use wood glue to reinforce joints where possible. Touch up defects with gap-filler and sand smooth.

Paint with primer and two coats of flat water based latex. Light Brown is good, dark blue is also cool